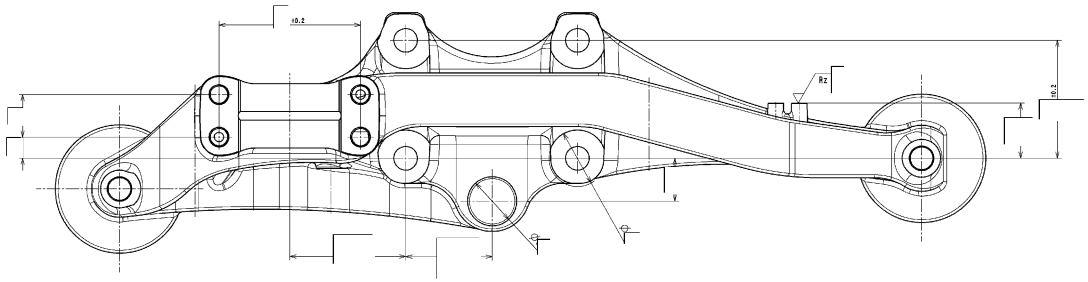

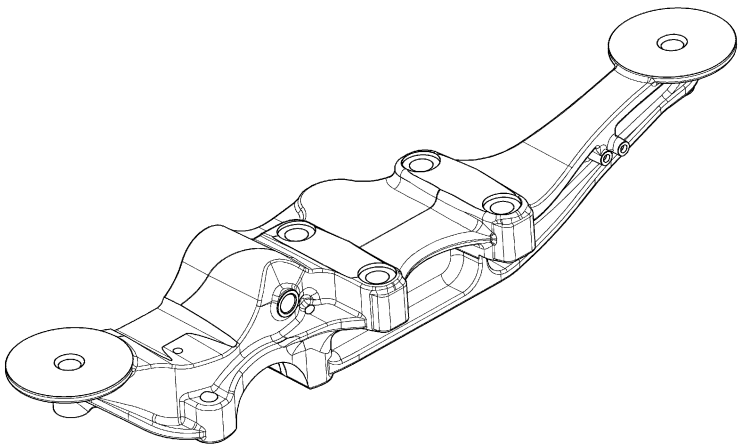

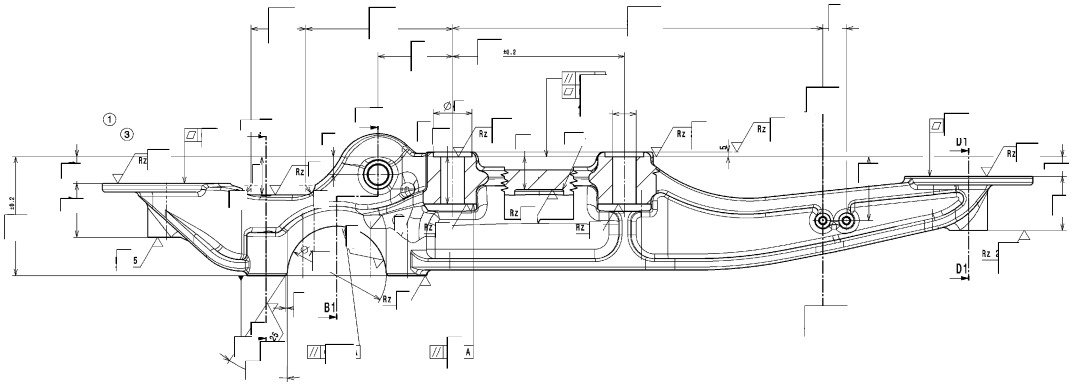

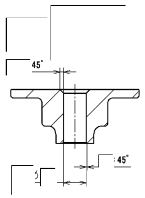

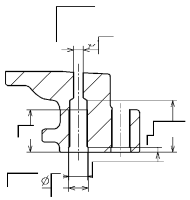

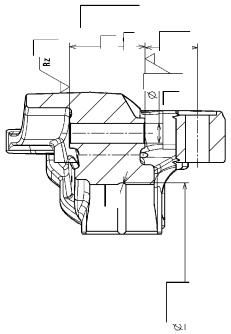

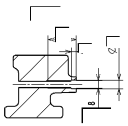

Ugt/Benennung/title

LUFTBALGTRAEGER LI

AIR BELLOWS SUPPORT LH

DIN ISO 1660/3 beachten! / Item notice DIN ISO 1660/3

Format/Size: A0

Blatt/sheet:

Sach-Nr./basic number: **328 38 41**

Under Konstruktion. / Are alterations are subject to the agreeal of the design department.